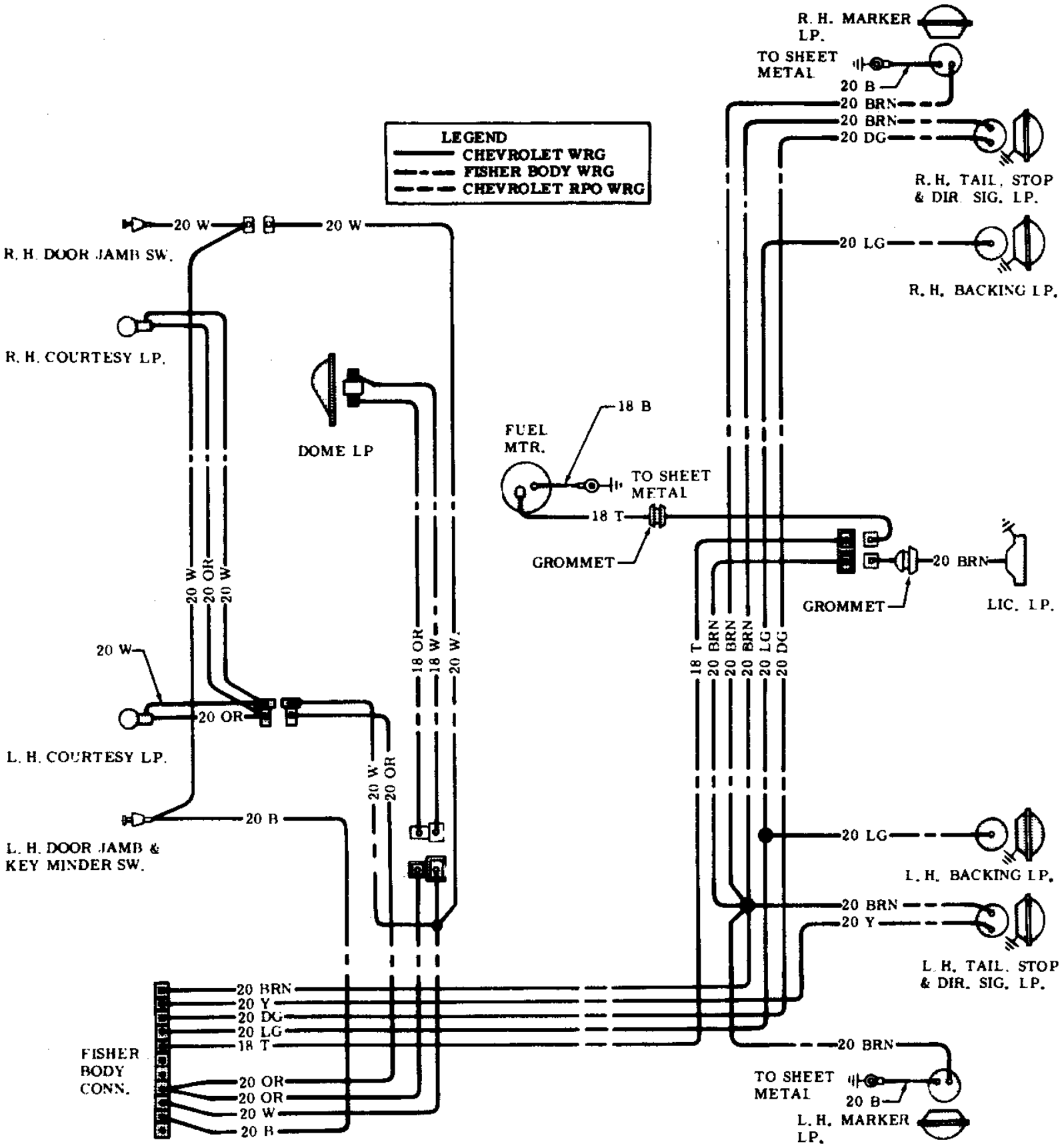

1970-72 Chevy II & Nova

Body & Rear Lights